MAIN FEATURES

It was designed for public and industrial areas requiring a virtually indestructible telephone. The housing is made of die-cast aluminum alloy, with a weatherproof enclosure and an exterior polyurethane finish. It is designed to withstand high levels of humidity, dust, vibration, shock, extreme temperatures, (salt)water, abuse or attempted vandalism.

Typical applications include Outdoor Environments, Public Highways, Underground Tunnels / Mining, Offshore Wind Farms, Production Floors, Chemical Processing Sites, Power Stations or inside large Lifting Machinery such as Quayside Container Cranes, Rubber-Tyred Gantry Cranes (RTGs) and bulk-material Ship Loaders.

- With LED lamp (5V) fixed on the top, blinking when incoming call
- Full rubber keypad
- “M” for muting
- “R” for flash recall
- “LR” button for last number redial
- Handset with noise-cancelling microphone and 42 cm armored cord (optional heavy duty curly cord)
- The handset supports hearing aid compatibility (HAC)
- Magnetic reed hook switch to reduce wear-prone parts
- With door cover, supports wall mounting with mounting bar
- Wiring access, 3xM20 cable gland entry points

TECHNICAL SPECIFICATIONS

SIP Specifications	
Power supply	PoE powered or 12V DC powered
Power adapter	100~240VAC 50~60Hz / 12V DC
Power consumption	Idle 1.8W / Working 2.4W
SIP protocol	SIP 2.0 (RFC3261)
Network port parameters	WAN Port: 10/100Base- T RJ-45 for LAN, Auto MDIX，LAN Port: 10/100Base- T RJ-45 for PC, Auto MDIX
Voice coders	G.711 A/U, G.722 8000/16000, G.723, G.729
Communication mode	Full duplex
Ringing volume	90~95 dB (A) @ 1 meter
Technical Specifications	
Compatible with most SIP-based IP-PBX servers that comply with SIP RFC 3261	
PoE 802.3af enabled (Power-over-Ethernet) or alternate power source	
PoE power supply, supports connecting the external loudspeakers (No external power supply needed)	
Supports automatic dialing with delay after picking up the phone, and 4 groups of sequential calling	
Supports automatic switching between primary and backup servers	
Supports remote Telnet debugging	
Supports MIC mute function	
Supports call transfer	
Supports two relays to remotely control external devices	
Operating temperature -40˚C to 65˚C / Storage temperature -40°C to 75°C	
M.T.B.F. exceeds 50,000 hours under normal operating conditions	
Network Web Management	
Fully configurable through any internet browser	
Static IP address provisioning or DHCP support	
Product self-diagnostic testing available through the web interface	
Network-adjustable earpiece volume and microphone sensitivity	
Firmware upload via web interface	
Echo cancellation: Supports G.168, and hands-free can support 96ms	
Supports SIP domain, SIP authentication (none, basic, MD5), and DNS name of server	
DTMF: SIPINFO, INBAND, RFC2833	
Dials Plan: Flexible dial-up configuration, support hotline	
Network Features	
WAN/LAN: Supports Bridge mode	
Supports static IP address	
Supports DHCP to obtain an IP adress on WAN port	
Supports VLAN	
Supports web config	
Data Protocols: IPv4, TCP, UDP, ICMP, ARP, RTP, SRTP, ONVIF, SNMPv1, RTCP-XR, 802.1x, Static IP/DHCP IP Assignment,IEEE 802.1p/Q, QoS/ToS, HTTP/HTTPS/DHCP, NTP, FTP/TFTP, CDP/LLDP VLAN Configuration, LDAP	

APPLICATION

IP telephony system is an efficient and convenient communication solution that uses Internet connection to implement voice calls and other communication services. Compared with traditional telephone systems, IP telephone system has higher efficiency and convenience.

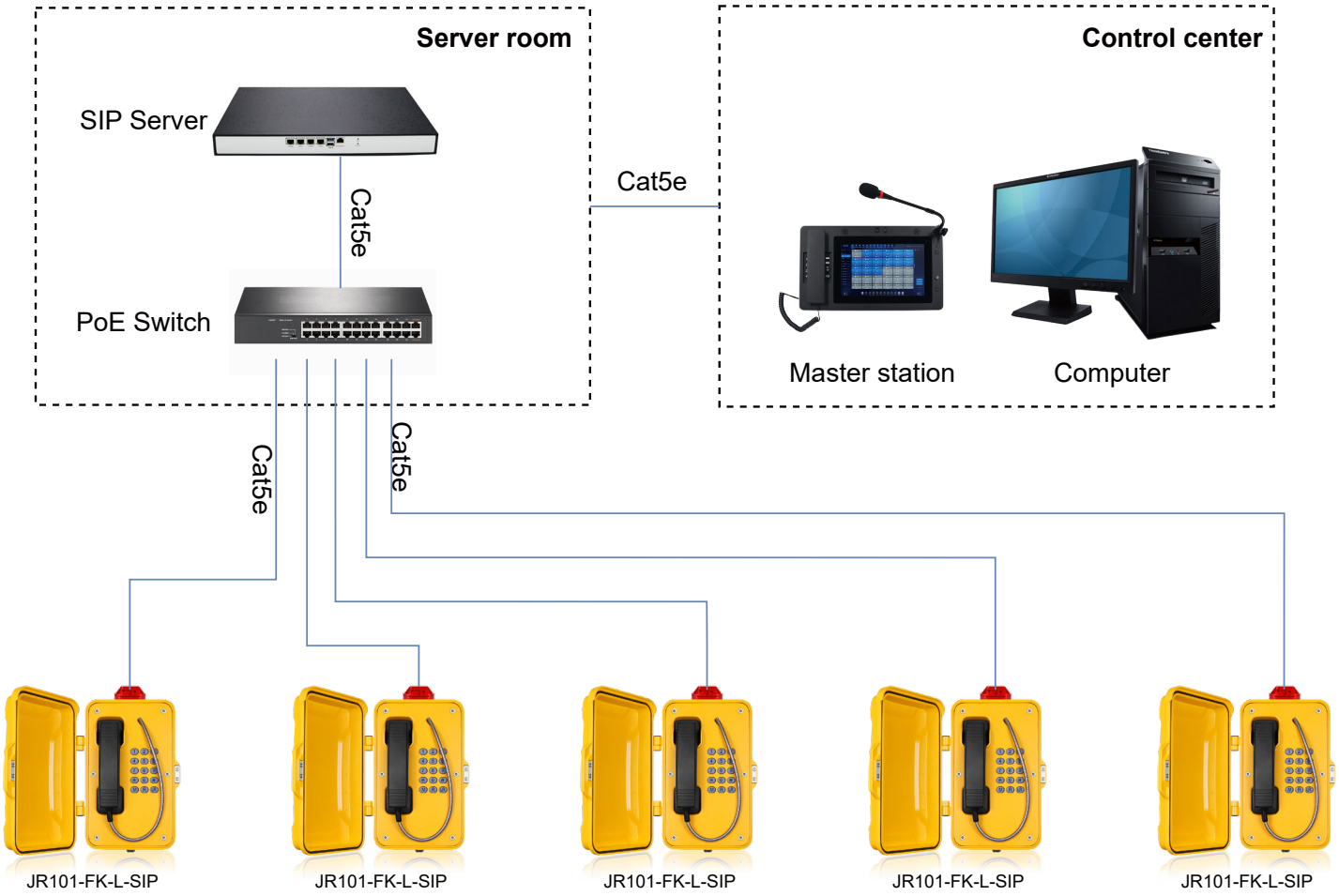

OPTIONAL ACCESSORIES

JR-LP-02
LED Beacon Light

JR-HSA-10/20/25/30/35
Broadcast Horn

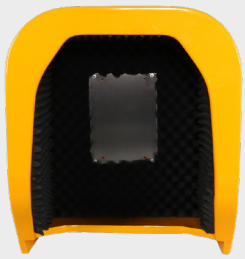

JR-TH-01
Acoustic Hood

APPLICATION SCENARIOS

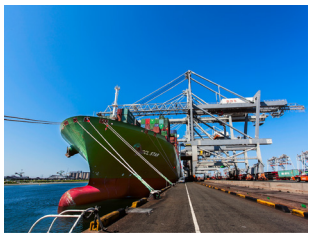
Port

Ship

Highway / Tunnel

Railway

Generating station

Mining industry

Industrial park

Heavy industry

DIMENSIONS

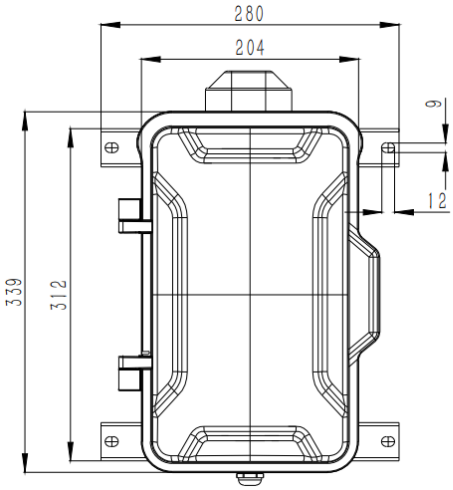

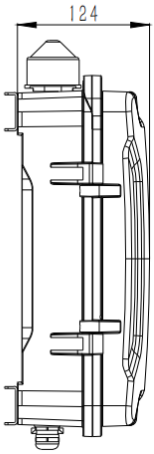

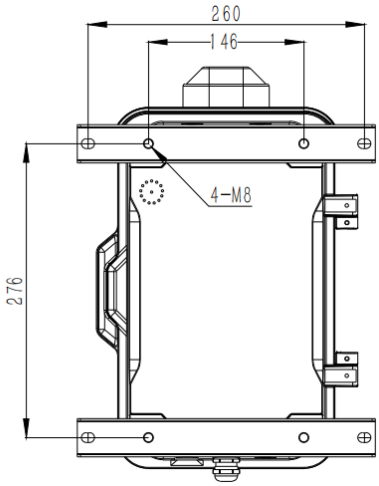

Package	
Unit size	246*339*124 (mm)
Shipping dimensions	300*440*200 (mm)
Packaging materials	Foam padding, carton
Weight	Gross weight: 7 kg / Net weight: 6 kg

Add: 6/F, A1, Xingyi industrial city, Baishixia Est., Fuyong, Bao'an, Shenzhen, China
Email: sales@jrteck.com
Tel: +86 - 755 - 27322952
Web: www.jr-ltd.com